Customer Replacement Procedure

Dell EMC Unity™ Family

Dell EMC Unity All Flash and Unity Hybrid

Replacing a faulted 80-drive DAE cooling module

302-003-777
REV 01
July 2017

This document describes how to replace a faulted 80-drive DAE cooling module in Unity All Flash and Unity Hybrid systems.

The cooling module, also referred to as a fan, is located inside the enclosure. To access the cooling modules, release and pull the enclosure out of the cabinet. The enclosure slides out of the cabinet far enough for you to access its internal components, and then locks on the rails in the service position so that you cannot pull it out any farther. Each DAE contains 10 fans: five in the front of the enclosure, and five in the rear of the enclosure.

Note

You do not have to power down any components to replace a faulted DAE cooling module.

- Before you start 2
- Identifying and locating the faulted 80-drive DAE cooling module 7
- Replacing the faulted 80-drive DAE cooling module 9
- Verifying the new 80-drive DAE cooling module 16
- Returning a faulted part 17

DELL EMC

Before you start

Before you begin this procedure, ensure that you have received the new part and have correctly identified its intended location in the system. Refer to your Unisphere **Service** section for instructions on how to identify failures, order new parts, and handle hardware components.

Additional resources

As part of an improvement effort, revisions of the software and hardware are periodically released. Therefore, some functions described in this document might not be supported by all versions of the software or hardware currently in use. The product release notes provide the most up-to-date information on product features. Contact your technical support professional if a product does not function properly or does not function as described in this document.

Where to get help
Support, product, and licensing information can be obtained as follows:

Product information
For product and feature documentation or release notes, go to Unity Technical Documentation at: www.emc.com/en-us/documentation/unity-family.htm.

Troubleshooting
For information about products, software updates, licensing, and service, go to Online Support (registration required) at: https://Support.EMC.com. After logging in, locate the appropriate **Support by Product** page.

Technical support
For technical support and service requests, go to Online Support at: https://Support.EMC.com. After logging in, locate **Create a service request**. To open a service request, you must have a valid support agreement. Contact your Sales Representative for details about obtaining a valid support agreement or to answer any questions about your account.

Special notice conventions used in this document

⚠ DANGER

Indicates a hazardous situation which, if not avoided, will result in death or serious injury.

⚠ WARNING

Indicates a hazardous situation which, if not avoided, could result in death or serious injury.

⚠ CAUTION

Indicates a hazardous situation which, if not avoided, could result in minor or moderate injury.

NOTICE

Addresses practices not related to personal injury.

Note

Presents information that is important, but not hazard-related.

Handling replaceable units

This section describes the precautions that you must take and the general procedures that you must follow when removing, installing, and storing any replaceable unit.

Avoiding electrostatic discharge (ESD) damage

When replacing or installing hardware units, you can inadvertently damage the sensitive electronic circuits in the equipment by simply touching them. Electrostatic charge that has accumulated on your body discharges through the circuits. If the air in the work area is very dry, running a humidifier in the work area will help decrease the risk of ESD damage. Follow the procedures below to prevent damage to the equipment.

Be aware of the following requirements:

- Provide enough room to work on the equipment.
- Clear the work site of any unnecessary materials or materials that naturally build up electrostatic charge, such as foam packaging, foam cups, cellophane wrappers, and similar items.
- Do not remove replacement or upgrade units from their antistatic packaging until you are ready to install them.
- Before you begin service, gather together the ESD kit and all other materials you will need.
- Once servicing begins, avoid moving away from the work site; otherwise, you may build up an electrostatic charge.
- Use ESD anti-static gloves or an ESD wristband (with strap).
  If using an ESD wristband with a strap:
  - Attach the clip of the ESD wristband to the ESD bracket or bare metal on a cabinet/rack or enclosure.
  - Wrap the ESD wristband around your wrist with the metal button against your skin.
  - If a tester is available, test the wristband.
- If an emergency arises and the ESD kit is not available, follow the procedures in Emergency Procedures (without an ESD kit).

Emergency procedures (without an ESD kit)

In an emergency when an ESD kit is not available, use the following precautions to reduce the possibility of an electrostatic discharge by ensuring that your body and the subassembly are at the same electrostatic potential.

NOTICE

These precautions are not a substitute for the use of an ESD kit. Follow them only in the event of an emergency.

- Before touching any unit, touch a bare (unpainted) metal surface of the cabinet/rack or enclosure.

- Before removing any unit from its antistatic bag, place one hand firmly on a bare metal surface of the cabinet/rack or enclosure, and at the same time, pick up the unit while it is still sealed in the antistatic bag. Once you have done this, do not move around the room or touch other furnishings, personnel, or surfaces until you have installed the unit.
- When you remove a unit from the antistatic bag, avoid touching any electronic components and circuits on it.
- If you must move around the room or touch other surfaces before installing a unit, first place the unit back in the antistatic bag. When you are ready again to install the unit, repeat these procedures.

Hardware acclimation times

Systems and components must acclimate to the operating environment before applying power. This requires the unpackaged system or component to reside in the operating environment for up to 16 hours in order to thermally stabilize and prevent condensation.

Refer to the table, Table 1 on page 4, to determine the precise amount of stabilization time required.

Table 1 Hardware acclimation times (systems and components)

If the last 24 hours of the TRANSIT/STORAGE environment was this:		**...and the OPERATING environment is this:**	**...then let the system or component acclimate in the new environment this many hours:**
Temperature	Humidity		
Nominal 68-72°F (20-22°C)	Nominal 40-55% RH	Nominal 68-72°F (20-22°C) 40-55% RH	0-1 hour
Cold <68°F (20°C)	Dry <30% RH	<86°F (30°C)	4 hours
Cold <68°F (20°C)	Damp ≥30% RH	<86°F (30°C)	4 hours
Hot >72°F (22°C)	Dry <30% RH	<86°F (30°C)	4 hours
Hot >72°F (22°C)	Humid 30-45% RH	<86°F (30°C)	4 hours
	Humid 45-60% RH	<86°F (30°C)	8 hours
	Humid ≥60% RH	<86°F (30°C)	16 hours
Unknown		<86°F (30°C)	16 hours

NOTICE

- If there are signs of condensation after the recommended acclimation time has passed, allow an additional eight (8) hours to stabilize.
- Systems and components must not experience changes in temperature and humidity that are likely to cause condensation to form on or in that system or component. Do not exceed the shipping and storage temperature gradient of 45°F/hr (25°C/hr).
- Do NOT apply power to the system for at least the number of hours specified in the table, Table 1 on page 4. If the last 24 hours of the transit/storage environment is unknown, then you must allow the system or component 16 hours to stabilize in the new environment.

Removing, installing, or storing replaceable units

Use the following precautions when removing, handling, or storing replaceable units:

⚠ CAUTION

Some replaceable units have the majority of their weight in the rear of the component. Ensure that the back end of the replaceable unit is supported while installing or removing it. Dropping a replaceable unit could result in personal injury or damage to the equipment.

NOTICE

- For a module that must be installed into a slot in an enclosure, examine the rear connectors on the module for any damage before attempting its installation.
- A sudden jar, drop, or even a moderate vibration can permanently damage some sensitive replaceable units.

- Do not remove a faulted replaceable unit until you have the replacement available.
- When handling replaceable units, avoid electrostatic discharge (ESD) by wearing ESD anti-static gloves or an ESD wristband with a strap. For additional information, refer to Avoiding electrostatic discharge (ESD) damage on page 3.
- Avoid touching any exposed electronic components and circuits on the replaceable unit.
- Never use excessive force to remove or install a replaceable unit. Take time to read the instructions carefully.
- Store a replaceable unit in the antistatic bag and the specially designed shipping container in which you received it. Use the antistatic bag and special shipping container when you need to return the replaceable unit.
- Replaceable units must acclimate to the operating environment before applying power. This requires the unpackaged component to reside in the operating environment for up to 16 hours in order to thermally stabilize and prevent condensation. Refer to Hardware acclimation times on page 4 to ensure the replaceable unit has thermally stabilized to the operating environment.

NOTICE

Your storage system is designed to be powered on continuously. Most components are hot swappable; that is, you can replace or install these components while the storage system is running. However, the system requires that:

- Front bezels should always be attached to ensure EMI compliance. Make sure you reattach the bezel after replacing a component.
- Each slot should contain a component or filler panel to ensure proper air flow throughout the system.

Unpacking a part

Procedure

1. Wear ESD gloves or attach an ESD wristband to your wrist and the enclosure in which you are installing the part.
2. Unpack the part and place it on a static-free surface.
3. If the part is a replacement for a faulted part, save the packing material to return the faulted part.

Standard touch point colors

Touch points are component locations where you can:

- Grip the hardware to remove or install a component.
- Open or close a latch.
- Turn a knob to open, close, or adjust a component.

Standard touch point colors are terra-cotta (orange) or blue.

Note

Within this documentation, the color orange is used instead of terra-cotta for simplicity.

Table 2 Standard touch point colors

Touch point color	Description
Terra-cotta (orange)	This color indicates that you can perform the task, such as remove a component with a terra-cotta (orange) lever, while the system remains powered (up/on). **Note** Some tasks may require additional steps.
Blue	This color indicates that a shutdown of the system or component is required before you can perform the task, such as removing a component with a blue lever.

Table 2 Standard touch point colors (continued)

Touch point color	Description

Identifying and locating the faulted 80-drive DAE cooling module

Before you replace a faulted 80-drive DAE cooling module, you must locate its placement within the storage system by using Unisphere.

Using Unisphere, locate the faulted 80-drive DAE cooling module in the enclosure.

Procedure

1. In Unisphere, select **System View**.
2. Select the **Enclosures** page.

   Select the 80-drive DAE in the **Enclosure** dropdown menu and then select the **Top** view of the enclosure. Locate the cooling module in this enclosure view.

3. Locate the faulted 80-drive DAE cooling module marked orange and displayed in the **Enclosure** view shown.

Figure 1 Faulted cooling module 0 - example location

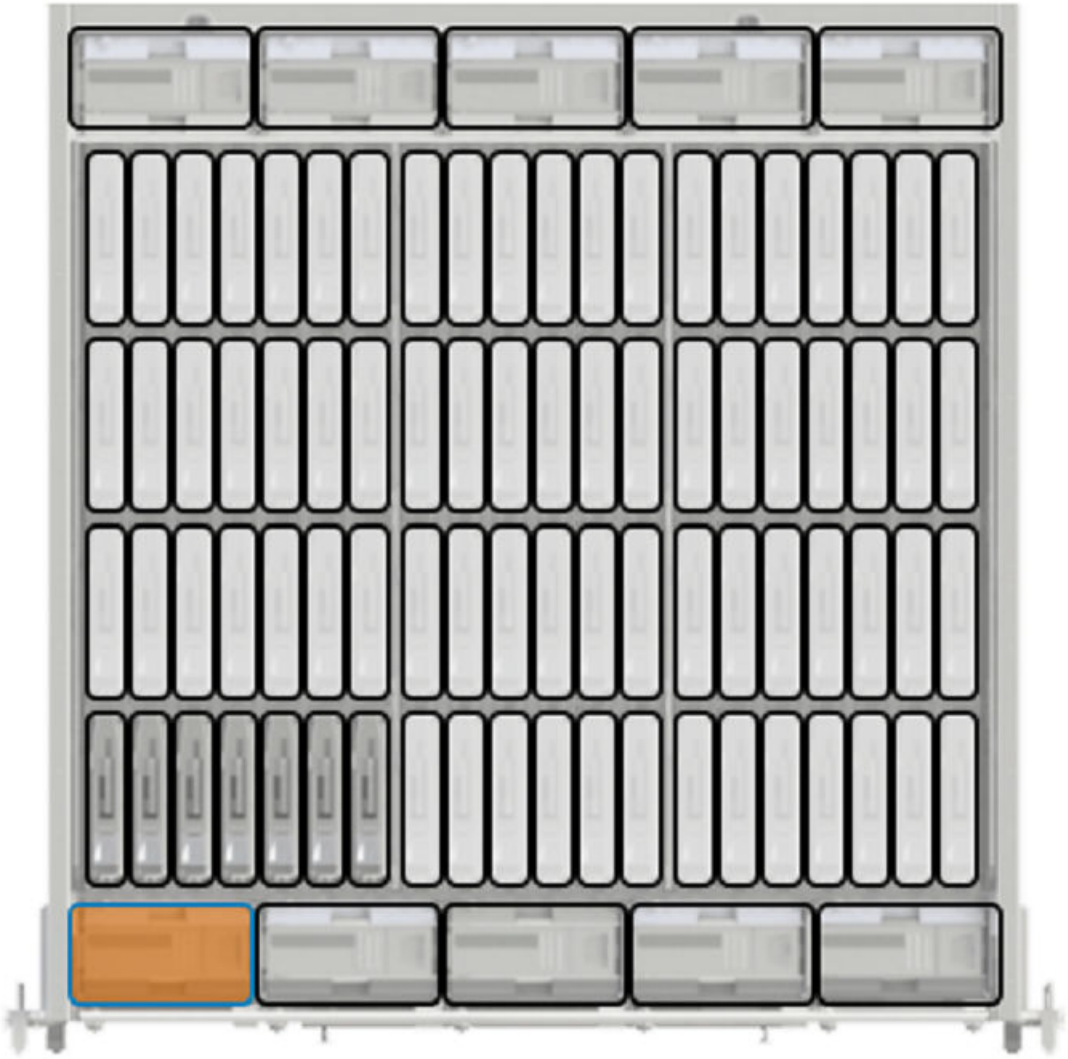

Replacing the faulted 80-drive DAE cooling module

Take the following actions to remove the faulted 80-drive DAE cooling module and install the replacement 80-drive DAE cooling module into the system.

Opening the door or console

Open the door or console, if one is present.

Procedure

1. Grasp the right side of the console.
2. Pull the console to swing it open.

Removing the front bezel

Figure 2 Removing the front bezel

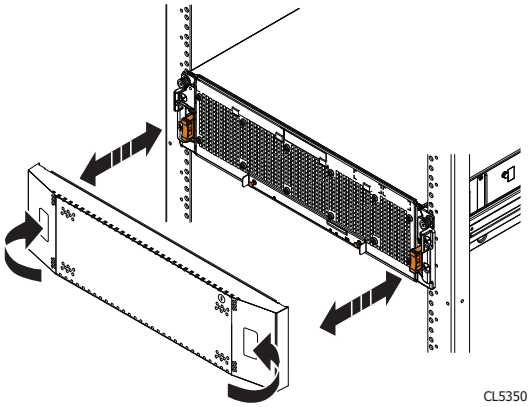

Procedure

1. If the bezel has a lock, insert the key that shipped with your enclosure into the lock, and turn the key to unlock the bezel.
2. Press the two latch buttons on the bezel surface to release the bezel from the cabinet.
3. Pull the bezel off the cabinet and put it on a clean, static-free surface.

Removing chassis securing screws

There are three sets of screws that may secure the chassis to the cabinet. The two black, knurled captive screws secure the chassis cover, and prevent the enclosure from coming out of the cabinet during service.

Note

The middle set, next to the black, knurled captive screws, are shipping screws and may have already been removed during a previous service event. These shipping screws are not reinstalled.

Procedure

1. Using a Philips screwdriver, remove the screws that secure the enclosure to the cabinet.

2. Retain the bottom two screws for reinstallation.

Figure 3 Location of chassis securing screws

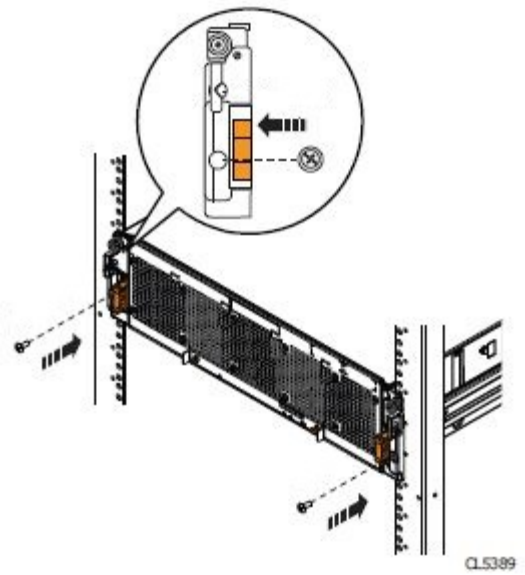

Pulling the enclosure chassis out

To access the internal components - disks and fans - you must release and pull the enclosure out of the cabinet. The enclosure slides out of the cabinet far enough for you to access its internal components and then locks on the rails in the service position so that you cannot pull it out any farther.
Refer to Figure 4 on page 10 while you perform the steps in this task.

Procedure

1. Grasp the orange enclosure latch handles by the knurled edges and then pull them out to release the chassis from the inner rails.
2. Slowly pull the chassis out of the cabinet until it locks in the secure service position.

Figure 4 Pulling the enclosure out of the cabinet

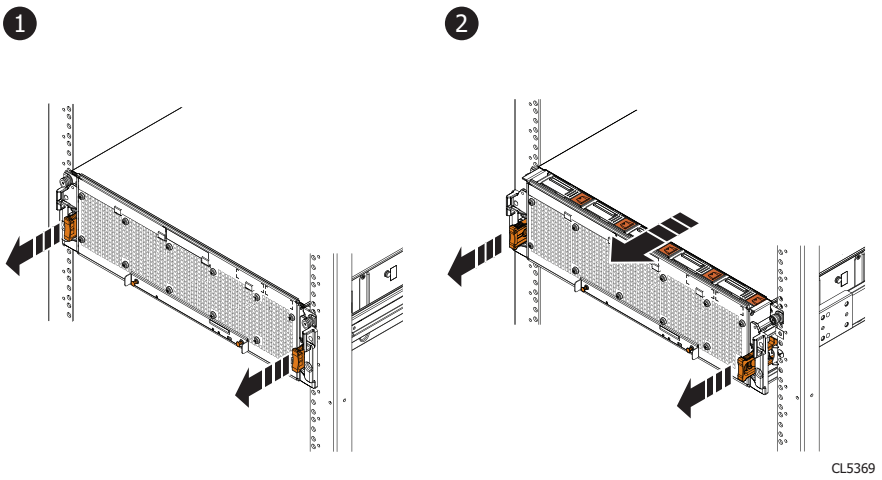

Locating a faulted fan within a chassis

A faulted fan displays an amber fault LED that is visible when the chassis is pulled open. Generally, you should not remove a fan unless its amber fault LED is on. Do not replace a faulted fan until you have a replacement disk with the same part number available.

There are ten fans within the chassis and the fans are arranged in two separate rows of five fans each (front and midrange). Each row and instance is labeled with a fan icon and corresponding number.; front = 0, midrange = 5. Each fan is numbered sequentially 0-9, left to right, with 0-4 being in the front row.

- Front row: Fans 0-4
- Back row (midrange): Fans 5-9

Procedure

1. Using the grid identifiers on the chassis, locate the faulted fan.

Figure 5 Enclosure top view: Locating a faulted fan within a chassis

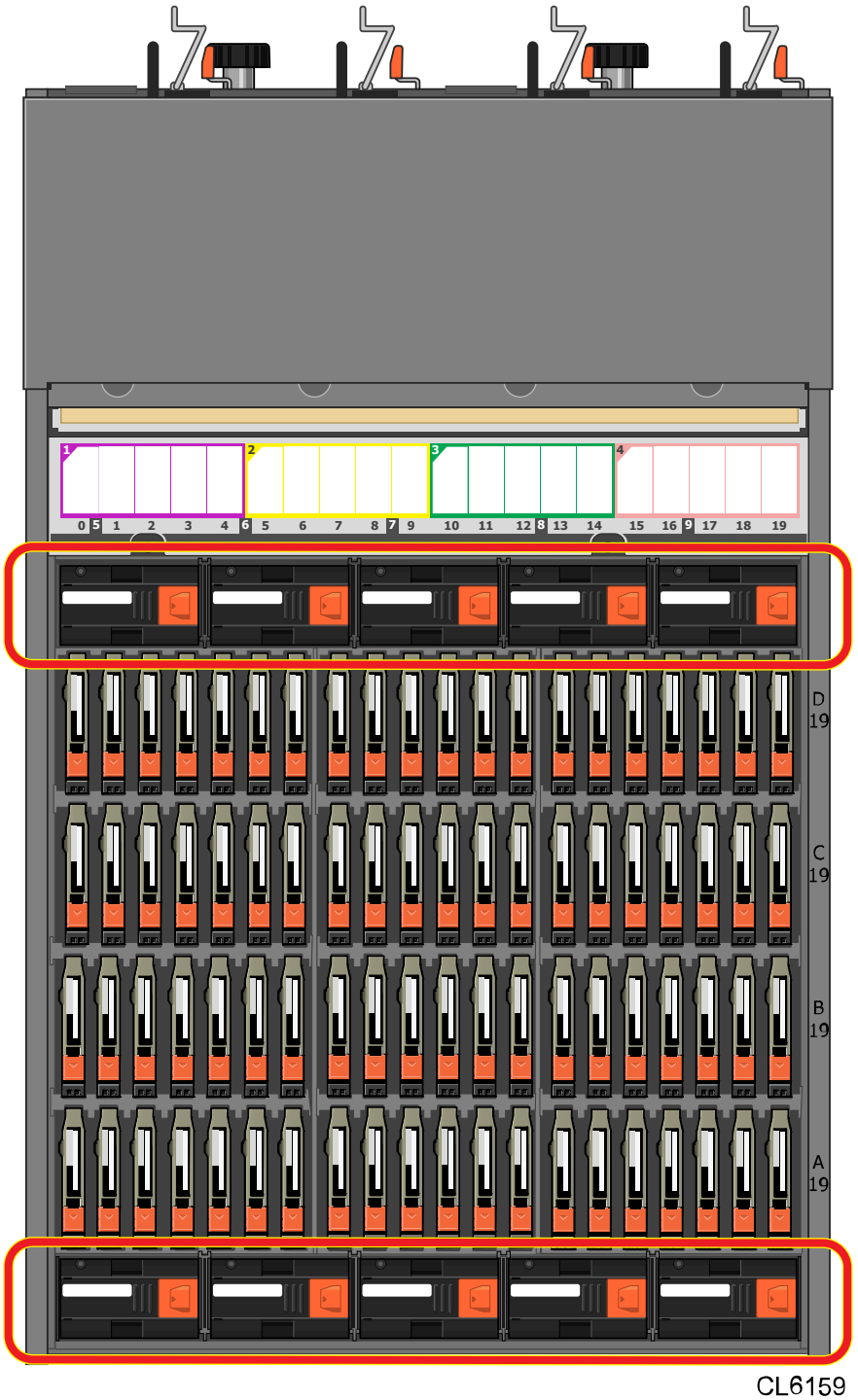

Figure 5 Enclosure top view: Locating a faulted fan within a chassis (continued)

The bottom of the figure is the front of the enclosure.

2. Verify that the amber fault LED displays on that fan assembly.

Figure 6 Fan top view: Location of amber fault LED

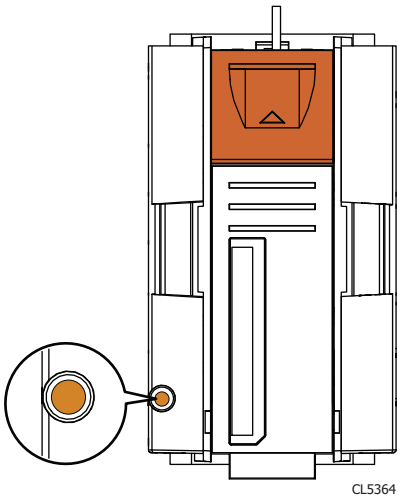

Removing a fan module

Refer to Figure 7 on page 13 when you perform the procedure that follows.

Procedure

1. On the top of the fan module, push the orange release tab to release the latch.
2. Lift the latch and slowly pull the fan module from the chassis.
3. Place the fan module on a static-free surface.

Figure 7 Removing a fan module

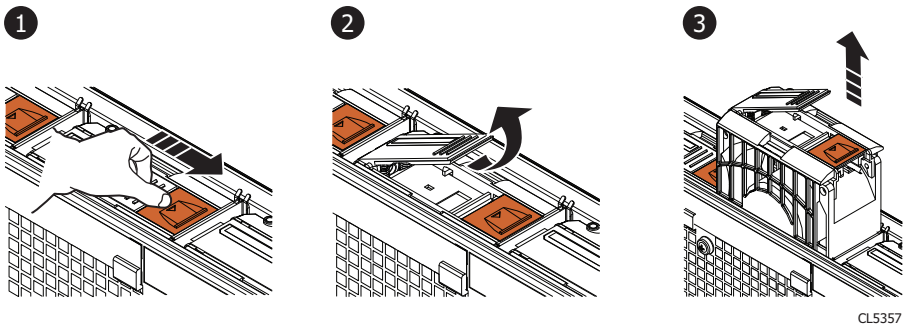

Unpacking a part

Procedure

1. Wear ESD gloves or attach an ESD wristband to your wrist and the enclosure in which you are installing the part.
2. Unpack the part and place it on a static-free surface.
3. If the part is a replacement for a faulted part, save the packing material to return the faulted part.

Installing a fan module

Refer to Figure 8 on page 14 when you perform the procedure that follows.

Procedure

1. With the fan module latch fully open, align the fan module with the guides and gently lower the fan into the slot until the fan connector is fully seated.

   Note

   Do NOT push the black latch downward (next step) until the fan is fully seated.

2. Push the latch downward and past the orange tab until it snaps securely in place.
3. After the latch is engaged, push down firmly on the fan module to verify that it is properly seated.

Figure 8 Installing a fan module

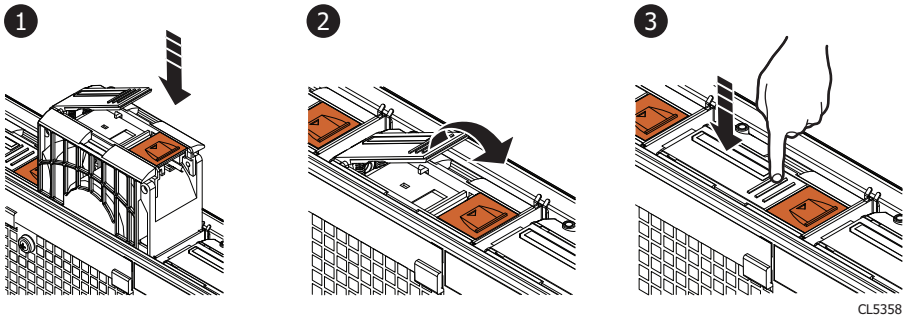

Inserting chassis-securing screws

The chassis-securing screws prevent removal of the DAE using the orange release handles. They also secure the DAE chassis to the cabinet rails in the event the cabinet needs to be moved. Ensure that these securing screws have been re-installed after servicing the cabinet.

Procedure

1. Using the orange enclosure latch handles, push the chassis completely into the cabinet.
2. Ensure that the self-locking latches are pushed in and fully engaged, and the enclosure cannot slide back out of the cabinet.

Figure 9 Inserting the chassis into the cabinet and securing with captive screws

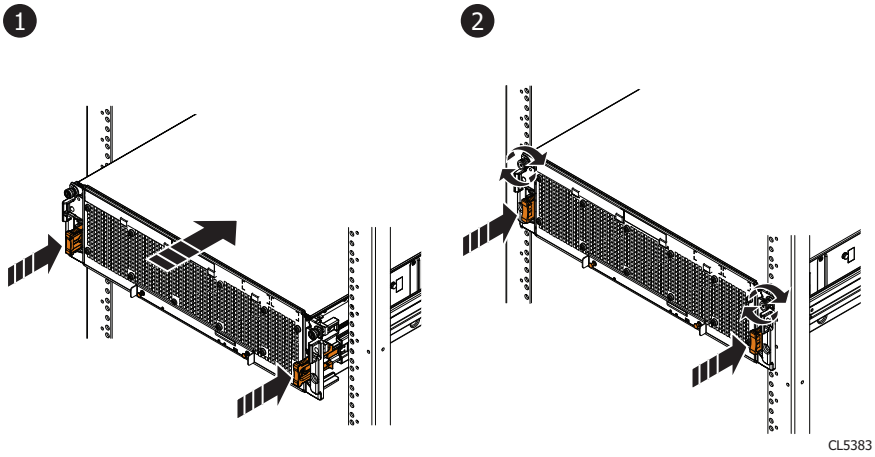

3. Insert the chassis-securing screws.

   Using a Philips screwdriver, insert a securing screw into the bottom hole on each side of the enclosure.

Note

The top set of screws are shipping screws, and are not re-installed.

Figure 10 Installing the chassis-securing screws

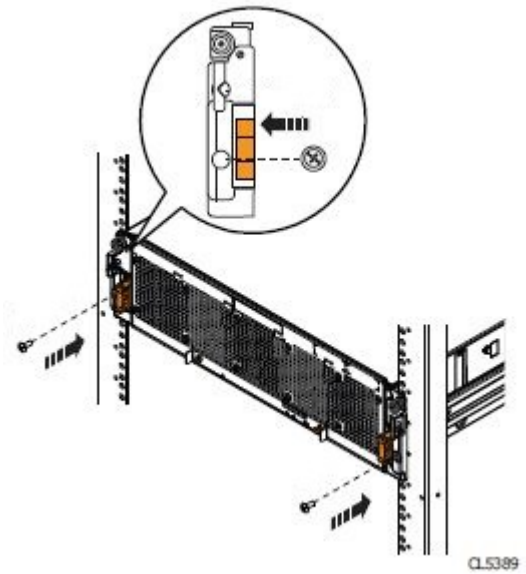

Installing the front bezel

Figure 11 Installing the front bezel

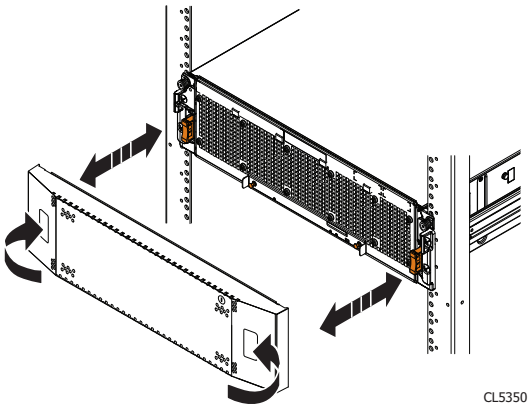

Procedure

1. Align the bezel with the enclosure.
2. Gently push the bezel into place on the cabinet until it latches.
3. If the bezel has a lock, insert the key that shipped with your enclosure into the lock, and turn the key to lock the bezel.

Closing the console

If you opened the console for access to the enclosure with the part you added or replaced, close the console using the procedure that follows.

Procedure

1. Grasp the free side of the console, and swing the console to the right to close it
2. Gently push on the console until it is closed.

Verifying the new 80-drive DAE cooling module

Verify that the new 80-drive DAE cooling module is recognized by your system, and operating correctly using the procedure that follows.

Procedure

1. In Unisphere, select **System View**.
2. On the Summary page, confirm that the system status is OK.
3. Select the **Enclosures** page.
4. Verify that the 80-drive DAE cooling module appears with OK status in the enclosure view.

   You may need to refresh Unisphere by clicking on the refresh icon next to the **Enclosures** view.
   Select the 80-drive DAE in the **Enclosure** dropdown menu and then select the **Top** view of the enclosure. Locate the cooling module in this enclosure view.

Figure 12 Replacement cooling module 0 - example location

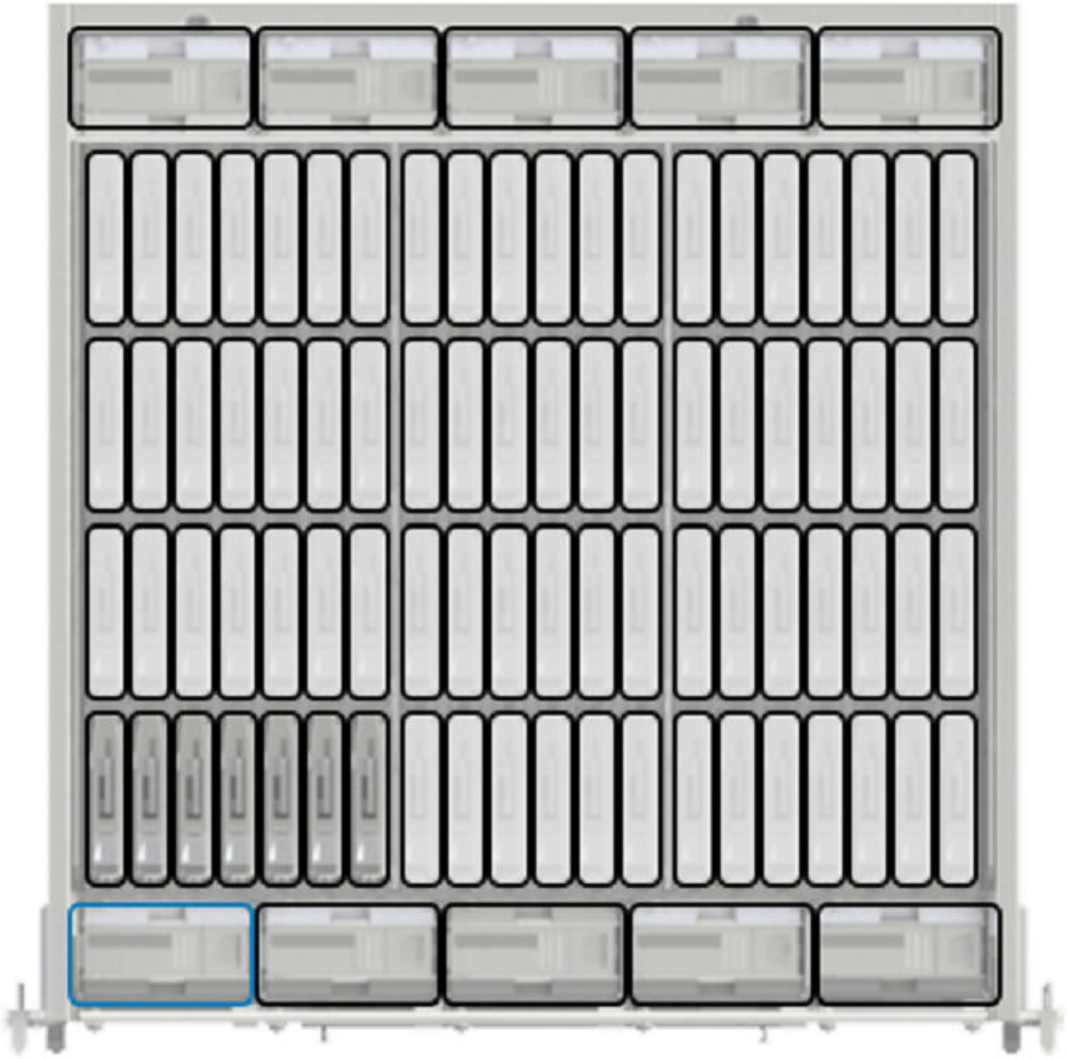

If the system health monitor shows the part as faulted, contact your service provider.

Returning a faulted part

We appreciate the return of defective material within 5 business days (for US returns). For International customers, please return defective material within 5-10 business days. All instructions and material required to return your defective part were supplied with your good part shipment.

Procedure

1. Package the faulted part in the shipping box that contained the replacement part, and seal the box.
2. Ship the failed part to your service provider as described in the instructions that were included with the replacement part.
3. (Optional) For more information about returning customer-replaceable parts, from Unisphere, click **Support** > **Replace Disk Drives, Power Supplies, and Other Parts** > **Return a Part** to display the part return instructions.

If your screen does not show the **Return a Part** option, contact your service provider for instructions on what to do next.

Copyright © 2017 Dell Inc. or its subsidiaries. All rights reserved.

Published July 2017

Dell believes the information in this publication is accurate as of its publication date. The information is subject to change without notice.

THE INFORMATION IN THIS PUBLICATION IS PROVIDED “AS-IS.“ DELL MAKES NO REPRESENTATIONS OR WARRANTIES OF ANY KIND WITH RESPECT TO THE INFORMATION IN THIS PUBLICATION, AND SPECIFICALLY DISCLAIMS IMPLIED WARRANTIES OF MERCHANTABILITY OR FITNESS FOR A PARTICULAR PURPOSE. USE, COPYING, AND DISTRIBUTION OF ANY DELL SOFTWARE DESCRIBED IN THIS PUBLICATION REQUIRES AN APPLICABLE SOFTWARE LICENSE.

Dell, EMC, and other trademarks are trademarks of Dell Inc. or its subsidiaries. Other trademarks may be the property of their respective owners. Published in the USA.